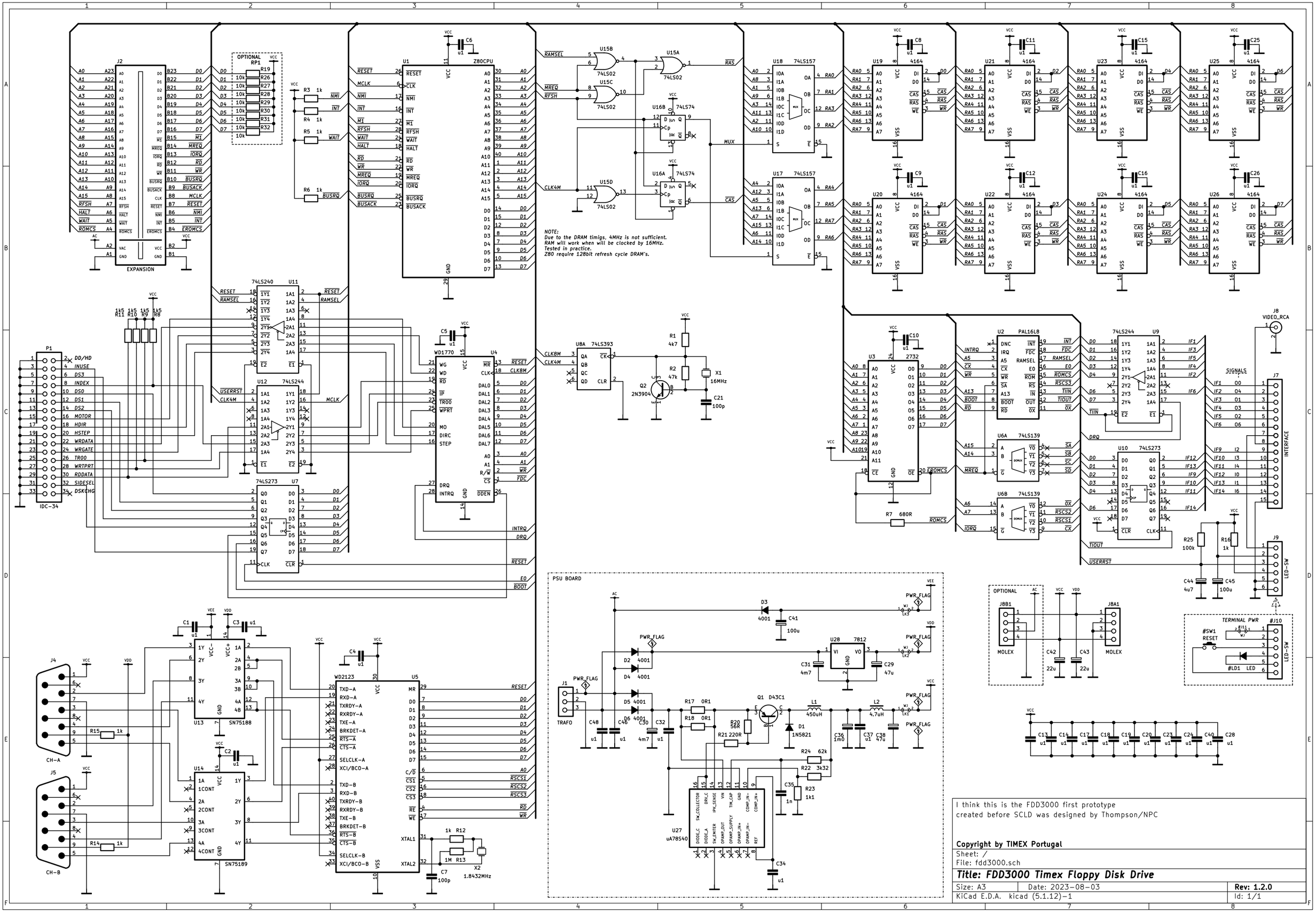

I think this is the FDD3000 first prototype
created before SCLD was designed by Thompson/NPC

Copyright by TIMEX Portugal

Sheet: /
File: fdd3000.sch

Title: FDD3000 Timex Floppy Disk Drive

Size: A3	Date: 2023-08-03	**Rev: 1.2.0**
KiCad E.D.A. kicad (5.1.12)-1		Id: 1/1