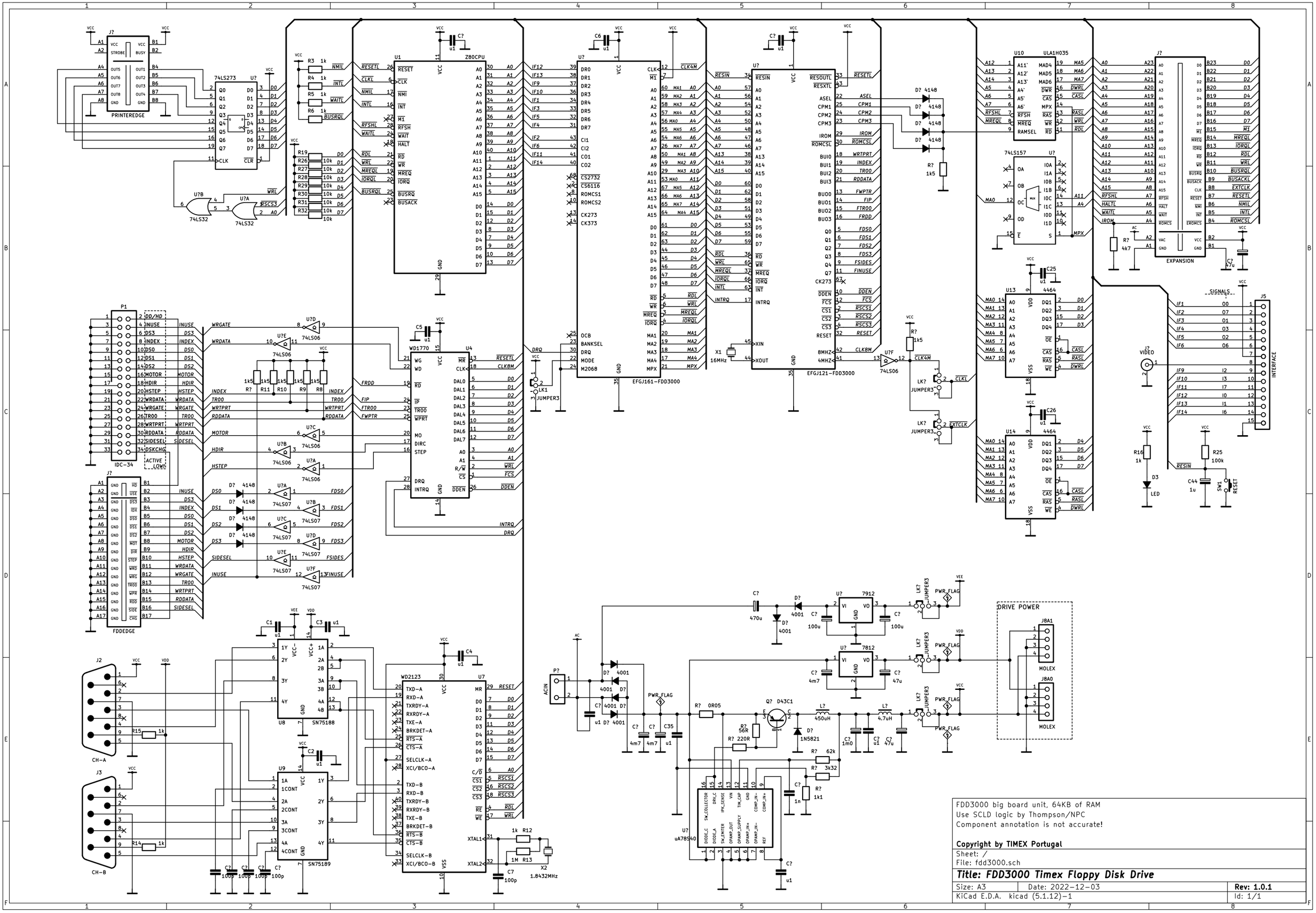

FDD3000 big board unit, 64KB of RAM
Use SCLD logic by Thompson/NPC
Component annotation is not accurate!

Copyright by TIMEX Portugal

Sheet: /
File: fdd3000.sch

Title: FDD3000 Timex Floppy Disk Drive

Size: A3	Date: 2022-12-03	**Rev: 1.0.1**
KiCad E.D.A. kicad (5.1.12)-1		Id: 1/1